Nuclear Engineering and Design 280 (2014) 608–618

Contents lists available at ScienceDirect

Nuclear Engineering and Design

journal homepage: www.elsevier.com/locate/nucengdes

Numerical investigation on a jet pump evolving liquid lead for GEN-IV reactors

Andrea Mangialardo[a,b], Walter Borreani[a,b], Guglielmo Lomonaco[a,c,*], Fabrizio Magugliani[b]

[a] GeNERG – DIME/TEC, University of Genova, via all'Opera Pia 15/a, 16145 Genova, Italy
[b] Ansaldo Nucleare S.p.A., Corso F. M. Perrone 25, 16161 Genova, Italy
[c] INFN, Via Dodecaneso 33, 16146 Genova, Italy

HIGHLIGHTS

- The design of the LFR pumps allows for an easy removal of the pump from the reactor vessel.
- The use of a jet pump in LFRs increases natural circulation when pumps are off with respect to other designs.
- The design of a liquid lead jet pump as primary pump for ALFRED has been developed.
- The CFD validation has been done using experimental data for water.
- A parametric analysis has been performed to obtain an optimal configuration.

ARTICLE INFO

Article history:
Received 30 May 2014
Received in revised form
13 September 2014
Accepted 15 September 2014

ABSTRACT

Heavy-liquid metals, such as lead and lead–bismuth eutectic, are promising candidates as coolant for advanced GEN-IV fast reactors as well as for Accelerator-Driven Systems. The advancing knowledge of the thermal-hydraulic behavior of these fluids leads to explore new geometries and new concepts aimed at optimizing the key components of a GEN-IV reactor for these fluids. In this paper, a theoretical and computational analysis is presented of a jet pump evolving liquid lead as primary pump for ALFRED (Advanced Lead Fast Reactor European Demonstrator). The jet pump is modeled with a 3D CFD code (FLUENT) and at design operating conditions. The analysis shows that a jet pump could be a viable solution for ALFRED (at least from a thermal-hydraulic point of view), albeit some technological issues remain to be fully addressed.

© 2014 Elsevier B.V. All rights reserved.

1. Introduction

The search for a high capacity energy source able to deal with CO_2 emissions has generated, in the recent past, an increasing interest in nuclear energy. In contrast with the fossil fuels, nuclear generated emissions are minimal. Furthermore, considering the envisioned Earth's population growth, which is expected to reach 10 billion people by the year 2050 from about 6 billion people of today, it will be necessary to increase the use of energy supplies that are low carbon emission; in this context nuclear energy could play an important role.

At the end of 2013, there were 437 nuclear power plants (NPP) in operation around the world, producing 18.37% of the world's electricity (IAEA, 2013). Most of these reactors are Light Water Reactors (LWRs) fueled with uranium enriched up to 5%; to improve the nuclear cycle efficiency, exploitation of U and Pu, burnup level, and to reduce the long-term radiotoxicity of the fission products, the development and design of a new generation of reactors, the so called GEN-IV reactors, was initiated. The Generation IV International Forum (GIF) proposed six reactor types: the jet pump analyzed in this paper is envisioned to be applied in a Lead Cooled Fast Reactors System (LFR), which uses liquid lead as coolant in the primary loop for the heat removal from the core. The LFR system has excellent fuel management capabilities since it operates in a fast-neutron spectrum and uses a closed fuel cycle for efficient conversion of fertile uranium (Cerullo and Lomonaco, 2012a). It could also be used as a burner to consume actinides from spent LWR fuel (Artioli et al., 2010). Within the LFR framework, the

* Corresponding author at: GeNERG – DIME/TEC, University of Genova, via all'Opera Pia 15/a, 16145 Genova, Italy. Tel.: +39 010 3532867; fax: +39 010 311870.
E-mail address: guglielmo.lomonaco@unige.it (G. Lomonaco).

http://dx.doi.org/10.1016/j.nucengdes.2014.09.028
0029-5493/© 2014 Elsevier B.V. All rights reserved.

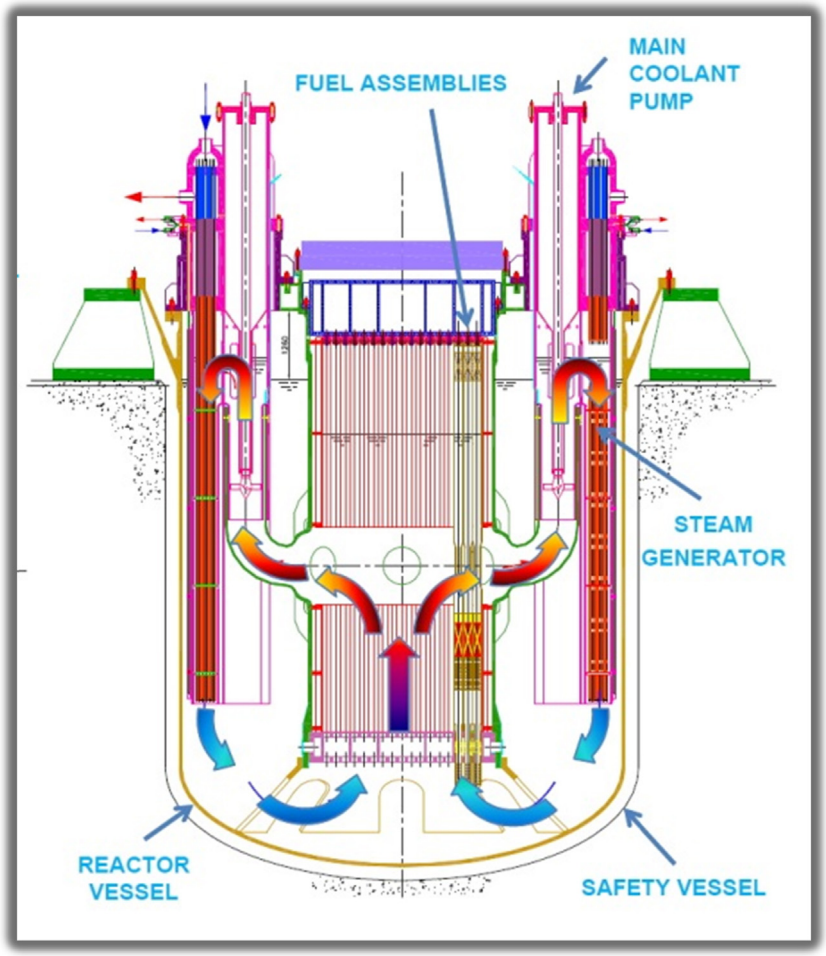

Fig. 1. ALFRED configuration.

so-called "adiabatic core" concept represents a particularly interesting solution. It is based on the idea of ensuring by design a condition of equilibrium in the fuel cycle (i.e., an equilibrium "fuel vector"), foreseeing nuclear power systems able to maintain a constant total amount of both plutonium and minor actinides (TRU), consuming only uranium (either natural or depleted), while discharging to the environment only fission products and reprocessing losses. Under such a hypothesis, all actinides can be continuously recycled in the same system, reducing both the waste volume and its long-term radiotoxicity, as well as utilizing effectively uranium resources (Artioli et al., 2010). As part of the 7th Framework Program LEADER (Lead-cooled European Advanced Demonstration Reactor project), the conceptual design of a lead-cooled fast demonstrator reactor, called ALFRED (Advanced Lead Fast Reactor European Demonstrator), has been carried out.

2. ALFRED (Advanced Lead Fast Reactor European Demonstrator)

The ALFRED configuration is shown in Fig. 1; its aim is to develop a totally representative scale demonstrator of the industrial European Lead Fast Reactor (ELFR, defined in the LEADER project), representing a guideline for its construction in terms of safety aspects, costs, components and technologies. The main features of ALFRED are shown in Table 1 (SNETP, Alemberti's report).

Because of the requirements of inspection and removability of all the major components of the reactor, all the components of the reactor are carefully designed to be removed from the system independently and separately. The design of the primary pumps (mechanical pumps) is such that the primary pump is enclosed in a hot manifold that will allow for its removal from inside the inner vessel, contributing to the compactness of the primary system. Alternative configurations for the main components of ALFRED are currently explored for the primary configuration, including a new design and location of the steam generators, of the ancillary equipment and of the primary pumps in order to find the optimal solution both at the single component level as well as for the whole reactor. With respect to the development of the primary pump, different configurations are currently under evaluation: this paper deals with the numerical investigation of the axial jet pump.

Table 1
ALFRED data (SNETP, Alemberti's report).

Primary lead temperature	400–480 °C
Secondary side pressure	180 bar
SGS	Once-through
Water/steam temperature	335–450 °C
Overall efficiency	42%
Primary pumps	Mechanical, removable located in hot leg inside the inner vessel

With respect to the development of the primary pump, the rationale for analyzing in detail the jet pump is related with the safety requirements of the primary pump of a GEN-IV reactor: enable the natural circulation of the coolant also in accidental conditions, remove the heat from the core even in the case of failure of any (Design Basis Scenario) or all (Station Black-out Scenario) of 8 the

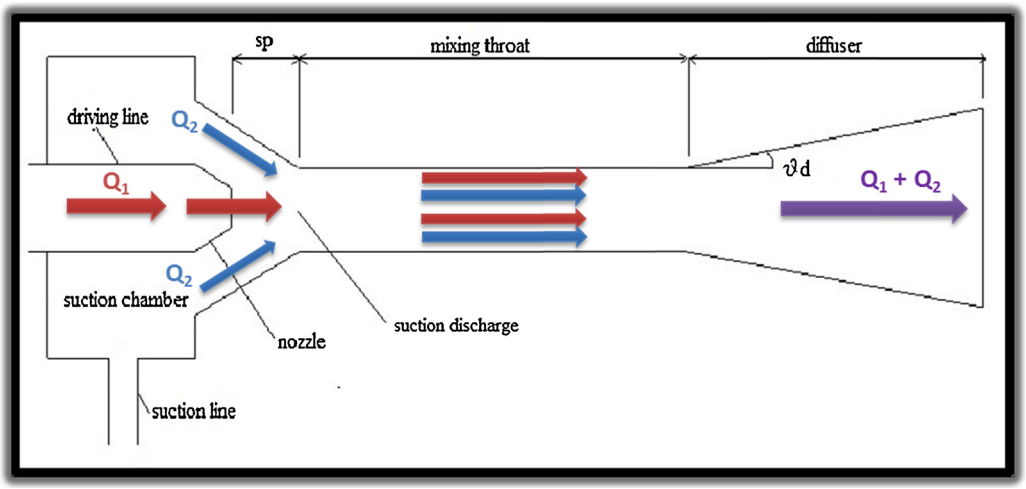

Fig. 2. Jet pump configuration.

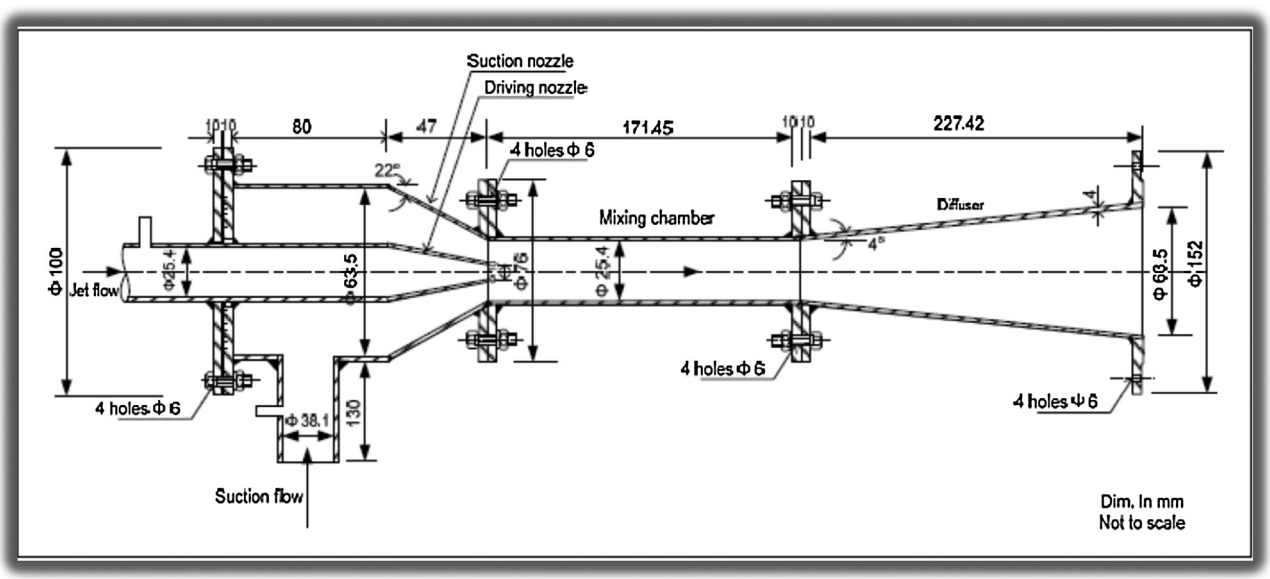

Fig. 3. Experimental water jet pump geometry.

pumps. The geometry of a jet pump is particularly suitable for enabling the establishment of natural circulation since there are no moving parts and obstacles inside the pump (such as blades) which could prevent the unobstructed fluid crossing.

This paper will present a numerical model of a lead jet pump as primary circulation pump for a GEN-IV LFR nuclear power plant using the operational conditions for ALFRED, assess its behavior at different mass-flow rates and geometries, and optimize its performance through a detailed 3D computational fluid dynamic (CFD) analysis (Jiyuan et al., 2012; Anderson, 1995; Versteeg and Malalasekera, 2007) using ANSYS Fluent.

Furthermore, to support the design and optimization stages, a system code (namely RELAP5-3D) has been used, particularly in its 1D Jet Mixer feature (Idaho National Laboratory, 2005).

2.1. Lead properties

GEN-IV fast reactors, in which the neutrons generated by fissions are not moderated, are cooled by liquid metals or gas. As known, GEN-IV LFR chain reaction is governed by fast neutrons because lead has a very small absorption cross-section and low scattering properties due to the high atomic number: the fuel efficiency is high since the so called "closed cycle" can be implemented and thus strongly reduces the production of highly radioactive waste (Artioli et al., 2010). Lead has the considerable advantage of not reacting with water and not burning in air (as for Na), and, from the point of view of basic safety features, it has high boiling point, very low vapor pressure and high shielding capacity against γ radiation compared with Na; moreover lead retains fission products like cesium and iodine released from the core in case of cladding failure. The likelihood of core damage is very low because lead has good characteristics with regards to heat transfer and thermal capacity.

The future widespread use of liquid metals as coolants for next-generation nuclear reactors is strictly correlated with the development of structural materials able to withstand corrosion. The corrosion in GEN-IV reactors is a physic or chemical–physical process involving several factors, some of which (e.g. the transition in solution of structural materials, the occurrence of reactions between corrosion products and impurities (Cerullo and Lomonaco, 2012b), the change in mechanical and physical properties of the materials) are subject to intense scrutiny. One promising method

to reduce the corrosion rate that affects structural materials is the addition (in a proper concentration) of elements that inhibit corrosion by forming a protective film providing a certain level of superficial protection (for example Zr, Ti or O) (Nuclear Energy Agency, 2007; Brasimone). A very recent technology is a special anti-corrosion treatment, called GESA, consisting of merging the steel at the surface with a protective layer (FeCrAl) applied by the LPPS (Low Pressure Plasma Spraying) technique, using a very intense electrons beam (Del Giacco, 2013; Jianu, 2011; Zhang, 2009).

Furthermore the erosion phenomena generated by liquid lead may cause the presence of impurities that could affect the performance and the behavior of the components involved in a process. The erosion phenomenon is strictly linked with the lead velocity: a velocity increase yields to a higher erosion of materials. The design of a circulation pump operating with liquid lead has therefore to deal with these constrains, which strongly affects the design and performance of the pump (Nuclear Energy Agency, 2007).

2.2. Jet pump behavior

Fig. 2 shows the typical configuration of a jet pump, consisting of a nozzle, a suction chamber, a mixing throat and a diffuser.

The driver flow (liquid, gas, or steam) enters under pressure the nozzle inlet and travels through the nozzle into the suction chamber; the nozzle converts part of its pressure into a high velocity stream. Pumping action begins when vapor, gases, or liquid in the suction chamber are entrained by the high velocity stream emerging from the nozzle and because of the decreased pressure in the suction chamber.

The resulting action causes the liquid, gas, or vapor in the suction chamber to flow toward the mixing throat, where the entrained material from the suction system mixes with the operating fluid acquiring part of its energy. Finally, in the diffuser section, part of the velocity of the mixture is converted into pressure (greater than the suction pressure, but lower than the operating fluid pressure). Unlike other pumping devices as centrifugal or rotational pumps, a jet pump does not have any moving parts: its working principle is based on a purely fluid dynamic phenomenon, and no mechanical components are being used to change the parameters of the entrained fluid (Cunningham, 2007).

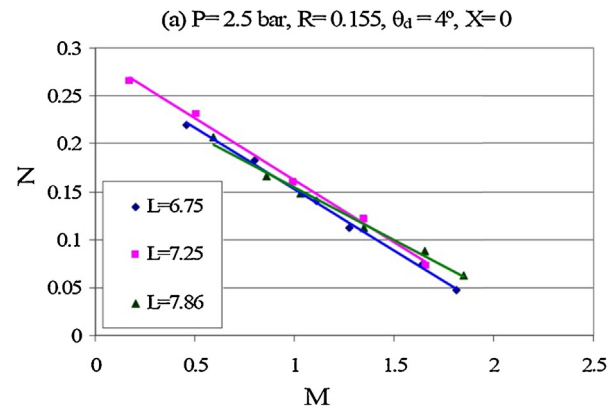

Fig. 4. Experimental data.

3. Water jet pump

Because of the absolute novelty of the design of liquid lead as evolving fluid in a jet pump (there is not an extensive set of experimental data against whom to compare numerical results and the current validated theoretical models have been validated for fluids other than liquid lead), the sizing process and guidelines have been validated for fluids other than liquid lead; particularly the theoretical model and experimental results of a water jet pump (El-Sawaf et al., 2011; Yapici and Aldas, 2013; Narabayashi et al., 2006) have been used to develop and validate the simulation model, to get more knowledge of the water jet pump behavior, and to assess how the operational variables affect the properties and performance of the water jet pump. In Fig. 3 the experimental water jet pump geometry is shown.

The available experimental results (El-Sawaf et al., 2011) are reported (in graphical form) as a function of two dimensionless coefficients (M and N, Fig. 4).

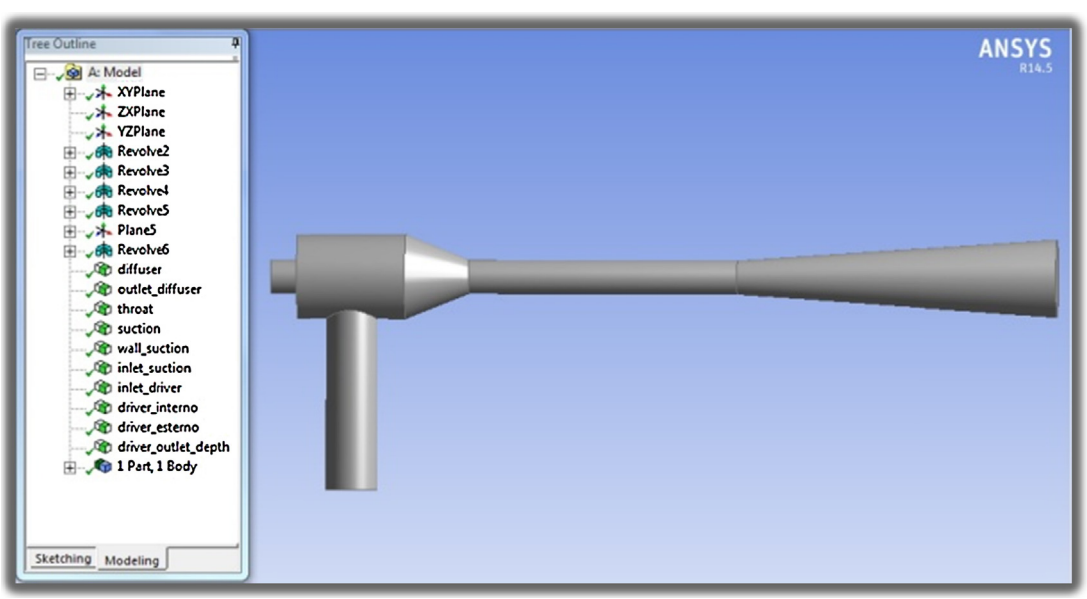

Fig. 5. Water jet pump geometry with ANSYS design modeler.

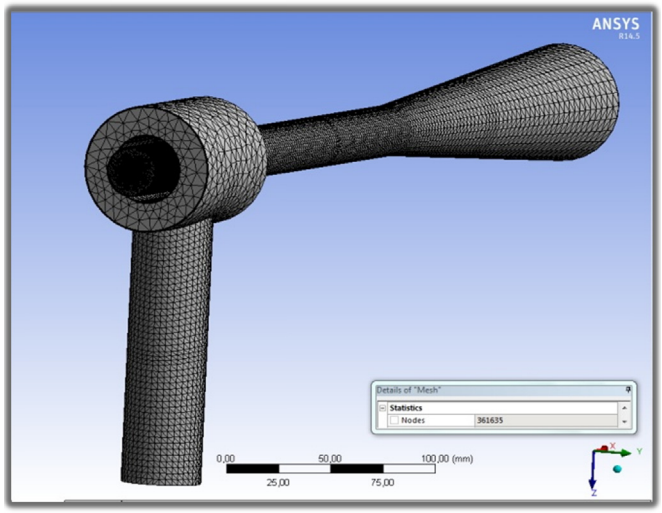

Fig. 6. Water jet pump mesh with ANSYS meshing.

N is the ratio of total head gained by the entrained fluid vs. the total head lost by the primary fluid.

$$N = \frac{P_{\text{diffuser}} - P_{\text{suction}}}{P_{\text{inlet driver}} - P_{\text{diffuser}}}$$

M is the ratio between the mass flow rate of the fluid at suction vs. the mass flow rate at driver

$$M = \frac{Q_2}{Q_1}$$

The following figures show the geometry and the mesh of the model created with ANSYS Design Modeler and ANSYS Meshing respectively (Figs. 5 and 6).

Given the absolute novelty of the analysis and because of the future analyses will have a non-homogeneous temperature field on the walls, it has been decided not to resort to any geometrical simplification (such as using ½ model and applying symmetry). Therefore, the whole and full geometry of the jet pump has been modeled. With the above considerations, and applying the proper mesh refinements to achieve an optimal sizing, the computational mesh consists of 4.4 million of nodes.

As mentioned above, the model was validated comparing the numerical predictions with experimental results (El-Sawaf et al., 2011) using water as evolving fluid. 7 different data points are simulated (A–G, Table 2).

As shown in Fig. 7, the numerical predictions match the experimental data; therefore, the simulation model can be considered validated within the range of M and N as in (El-Sawaf et al., 2011) and can be used for beginning the campaign of numerical predictions using liquid lead as evolving fluid.

Once the model of the jet pump has been validated applying the theoretical model and using water as evolving fluid, the question arises of whether the same theoretical model and therefore the same sizing criteria could be applied for liquid lead as evolving fluid. According to the experimental campaign carried out by Ansaldo Nucleare and ENEA at the CIRCE Plant at ENEA-Brasimone Research Center in 2003, the same sizing criteria used for water could be applied to liquid lead. The CIRCE (CIRColazione Eutettico) facility, located at Brasimone Research Center of ENEA in Italy, deals with the thermal-hydraulic, material compatibility and control of the chemistry of liquid metals and is an experiment targeted to the verification of the operational principles of an ADS (Accelerator Driven System) reactor. One of the experimental campaigns carried out at CIRCE was the calibration of the flow meter, shaped as a Venturi Nozzle, installed in the test section of CIRCE for the assisted circulation experiments on the flow of the eutectic fluid Pb–Bi.

The results of the experiment validates the assumption that the sizing criteria valid for water could be applied also for lead, therefore for a lead jet pump: the experimental data show that the operating curves obtained on a Venturi nozzle applying the sizing

Table 2
Simulations results.

Point	Pressure driver tot. (bar)	M	N	Pressure diffuser tot (bar)	$\dot{m}$ suction (kg/s)	Efficiency	Pressure suction tot. (bar)	$\dot{m}$ driver (kg/s)
A	1.619	1.53	0.13	1.288	1.05	20%	1.246	0.69
B	1.629	1.44	0.14	1.294	0.99	20%	1.246	0.69
C	1.638	1.38	0.15	1.300	0.94	21%	1.246	0.69
D	1.647	1.26	0.17	1.306	0.87	21%	1.246	0.69
E	1.648	1.16	0.19	1.313	0.80	22%	1.246	0.69
F	1.667	1.09	0.21	1.318	0.75	22%	1.246	0.69
G	1.685	0.87	0.24	1.331	0.60	21%	1.246	0.69

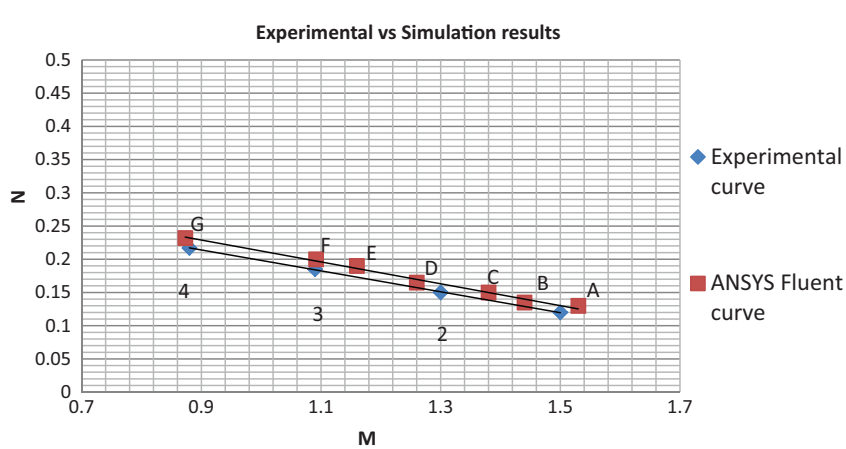

Fig. 7. Comparison between experimental data and simulated results.

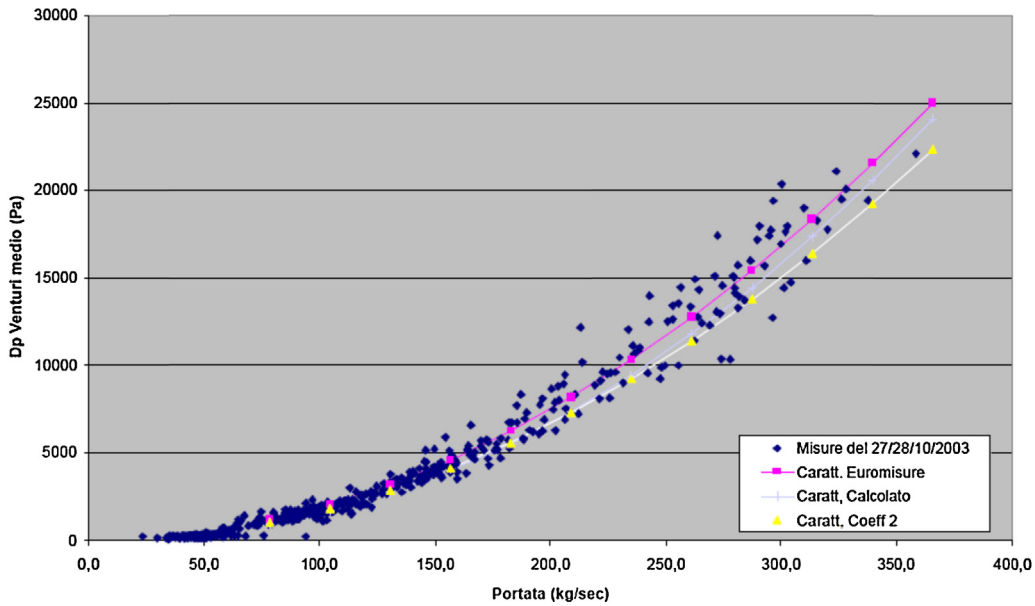

Fig. 8. Experimental vs. theoretical results on the reference curve pressure-mass flow for Venturi Nozzle at 200 °C.

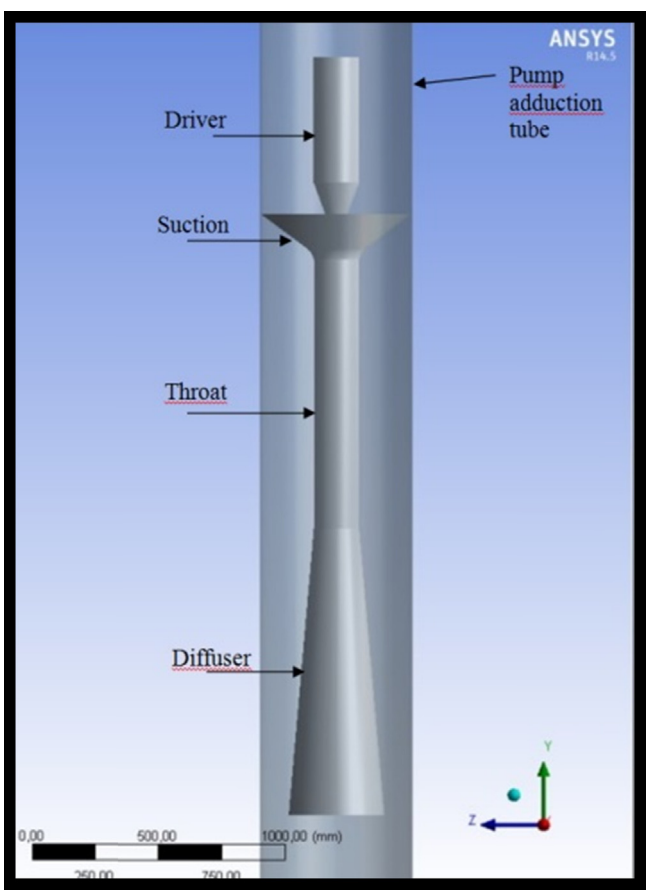

Fig. 9. Lead jet pump geometry model.

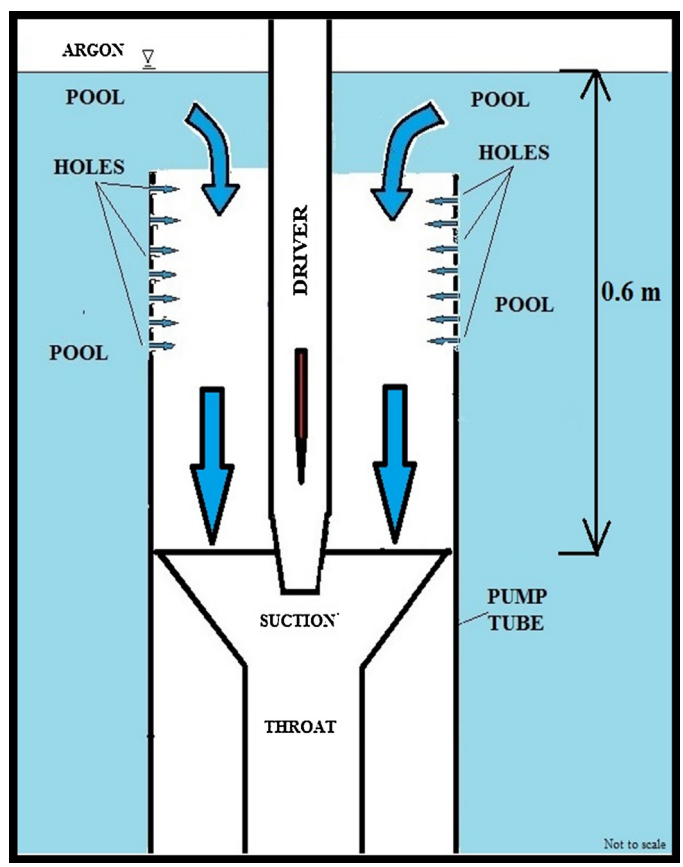

Fig. 10. Lead jet pump simulation suction section.

criteria valid for water have been matched by the experimental data using lead-bismuth, as reported in Fig. 8.

4. Lead jet pump

As reported in Section 2, different design options are currently explored for the design of ALFRED and these options include a new design of the steam generators, of the primary pumps and of the location of these components inside the vessel; as for the primary pump, the benefits of disengaging the pump from the steam generator are under scrutiny and the results of this analysis will assess the viability of a jet pump as primary pump.

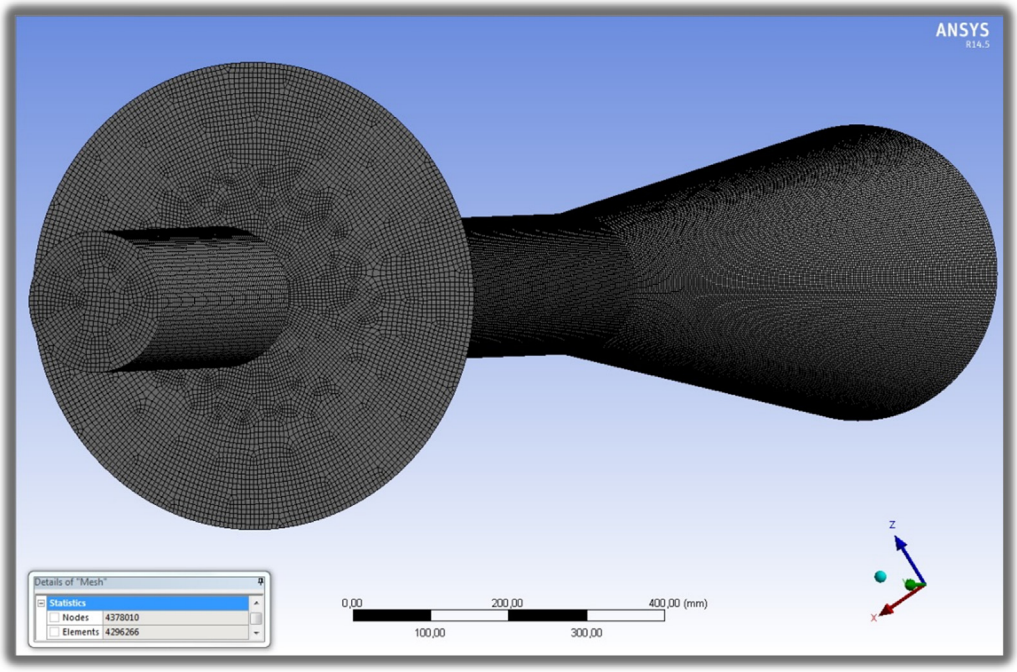

Fig. 11. Lead jet pump mesh.

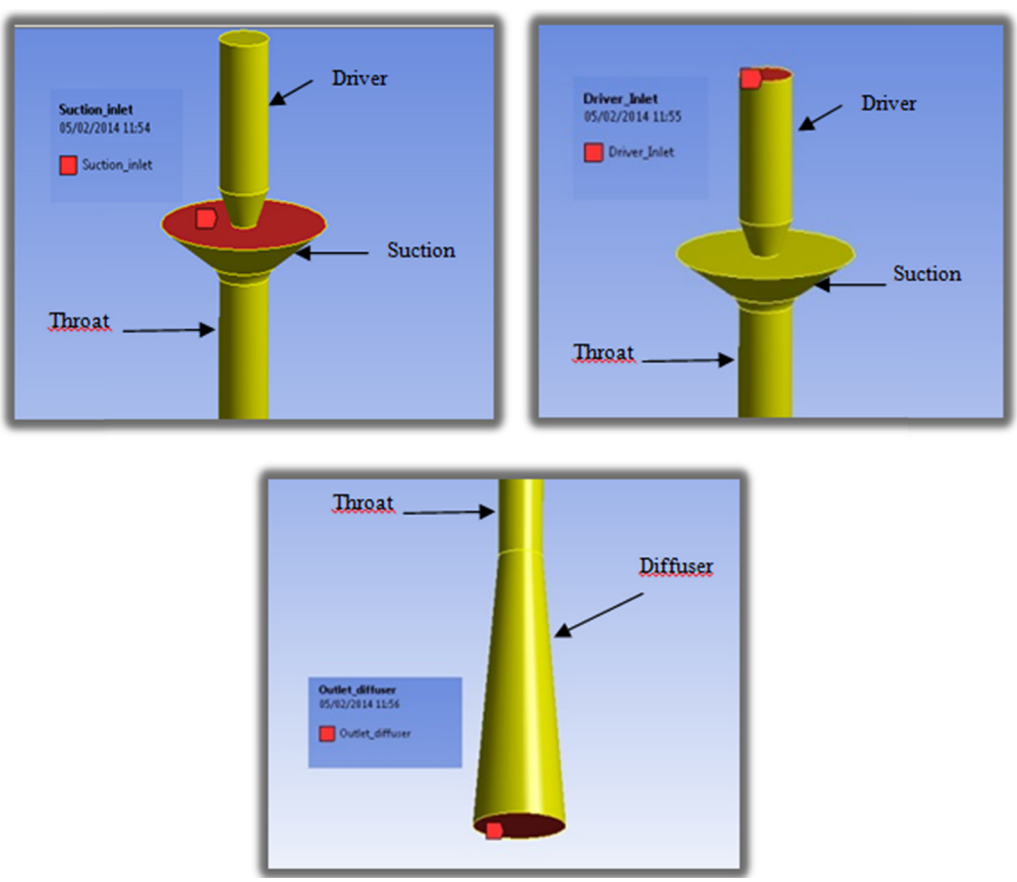

Fig. 12. BCs location.

Supposing to disengage the primary pump from the steam generator, the primary pumps requirements and constrains are:

- the pump is placed inside the pump duct, which has a diameter of 0.6 m and a longitudinal length of ~8 m;
- the pump operates with lead entering the duct at 400 °C from the top, near the free surface of the pool, and/or from holes in the upper part of the duct;
- the pressure at inlet and outlet is affected by the hydrostatic head;
- the pump has to ensure a head of at least 1.5 bar to provide for the required coolant circulation and compensate the pressure losses in the circuit;
- the volumetric mass flow rate is 0.31 m^3/s (3274 kg/s) for each pump.

Applying the sizing criteria for the water jet pump and using the thermal-mechanical properties for liquid lead (Nuclear Energy Agency, 2007) in the theoretical correlations (Cunningham, 2007), an initial geometry for the lead jet pump has been defined.

Figs. 9 and 10 show the 3D, parametric geometry, completely axial symmetric, which satisfies the dimensional requirements imposed by the pump duct, having a longitudinal length of 2.3 m and a maximum diameter of less than 0.6 m, an inlet suction placed at a distance of 0.6 m from the free surface. Because of the geometry of the duct, the analysis begins at the convergence section, as reported in Fig. 10, assuming a uniform distribution of the flow at inlet. Fig. 11 shows the lead jet pump mesh created with ANSYS Meshing: it is a structured Hexa Mesh created using the Multi-zone method, and, as already anticipated, has 4.4 millions of nodes; furthermore the quality criteria have been checked and a wall refinement has been applied (ANSYS, 2013).

Concerning the solution setup, the viscous, isothermal and adiabatic model has been chosen as physical model, using he κ–ε model for Turbulence and the Standard Wall Function as Near Wall Treatment (Wilcox, 1998; Tennekes and Lumley, 1972). To ensure an ideal near wall treatment, an *y+* between 30 and 300 has been selected. Furthermore, because of the intended use of the pump, a steady state solution has been simulated. The model does not require any specific solution method, therefore the default solution method of ANSYS Fluent has been used. The following Boundary Conditions (BC) were applied:

Table 3
Reference case results.

$\dot{m}$suction (kg/s)	$\dot{m}$ driver (kg/s)	M	N	$P_{suction}$ (bar)	$P_{diff.}$ (bar)	P_{driver} (bar)
2202	1250	1.76	0.229	1.63	6.24	26.3

- a *Pressure Inlet* at the inlet suction zone,
- a *Pressure Outlet* at the outlet diffuser zone,
- an *Inlet Mass flow rate* on the driver zone.

Fig. 12 highlights the geometry sections in which the BCs have been applied.

The criteria chosen for assessing the quality of the simulations are substantially two:

- *residuals convergence*, monitoring the trend of the residuals of the variables during the simulation, considering acceptable when of the order of at least 10^{-5};
- *the inlet mass flow rate at suction*: this parameter has been monitored until a constant value was achieves.

The first simulation case required 13,000 iterations to reach the criteria stated above. The results of this simulation are shown in Table 3.

The analyzed geometry achieves the target mass flow rate at the outlet of the diffuser as well as the target pump head and shows good pump performance in term of ratio of mass flow rate at suction

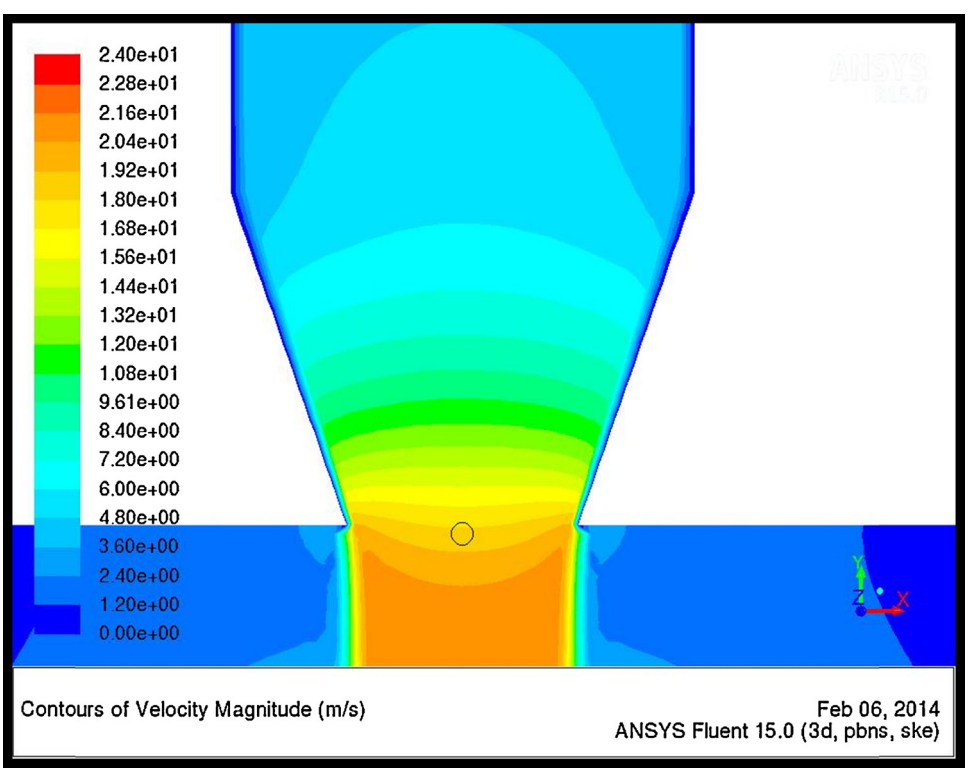

Fig. 13. Contours of nozzle velocity magnitude.

Table 4
Optimal case results.

$\dot{m}$ suction (kg/s)	$\dot{m}$ driver (kg/s)	M	N	P_{tot}. suction (bar)	P_{tot}. diffuser (bar)	P_{tot}. driver (bar)	V_{tip} driver (m/s)	V_{max} outlet diffuser (m/s)	V_{av} outlet diffuser (m/s)
2010	1310	1.53	0.28	1.63	6.27	23	15.8	3.68	2.5

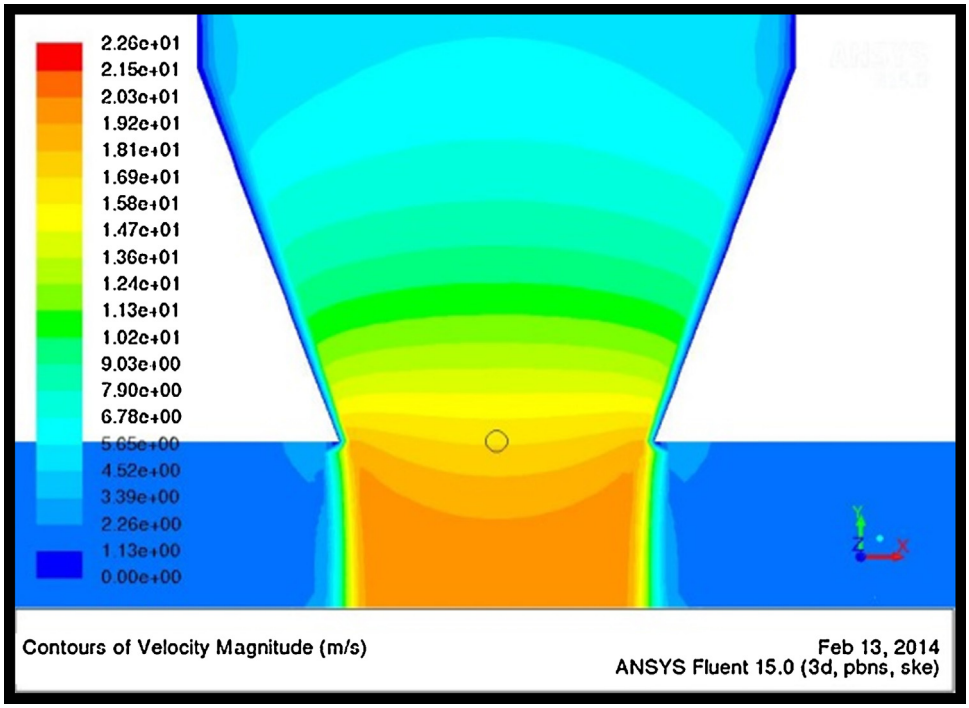

Fig. 14. Contours of nozzle velocity magnitude optimal case.

vs. mass flow rate at driver (parameter M). While the requirements and constrains stated above have been met, an in-depth analysis of the results shows some areas requiring improvement:

- The lead velocity reaches values of about 18 m/s at driver tip (Fig. 13); because of the erosion phenomena caused by liquid lead, this velocity in the nozzle could damage the walls of the jet pump
- The fluid leaving the diffuser outlet has a non-uniform velocity profile and has a maximum value of 4.5 m/s; ideally the diffuser should have a velocity profile as much uniform as feasible, and a maximum value of 3–3.5 m/s to avoid any erosion phenomena. The required pressure at the driver inlet is 25.5 bar. This figure implies that the driver pump has to provide for a head of at least 25 bar. To the authors' knowledge, no commercially available pump elaborating liquid metal supplying an operating head of 25 bar exists.

Taking into account the previous considerations and starting from the reference simulation case, a parametric CFD analysis has been carried out modifying the geometrical and boundary conditions of the lead jet pump. The goal of the parametric analysis is to obtain an optimal jet pump configuration which supplies the mass flow rate and jet pump head required by the ALFRED project data, respects the geometrical limitations, requires a static pressure at driver inlet as low as possible, maintains the tip driver velocity lower than 15 m/s (and as low as possible), has a uniform profile of velocity at the diffuser outlet with a maximum value of 3.5 m/s, and still shows good performance in term of M and N.

In order to assess the specific impact of each parameter on the jet pump performance, the parametric analysis campaign modified only one parameter for each considered case; a number of simulations were performed to define the ideal configuration.

By increasing the diffuser length and the nozzle diameter of 3% and 5.5% with respect to the initial configuration, changing of 4.8% the initial value of the driver mass flow rate with respect to the initial configuration, the simulations show that an ideal design, was reached, which satisfies the mass flow rate required at diffuser outlet maintaining a good overall performance (Table 4), has a driver tip velocity of about 15 m/s (Fig. 14), has a max value of diffuser outlet velocity of about 3.5 m/s and an average value of 2.5 m/s (Fig. 15), path lines show that there is no counter flow and/or recirculation (Fig. 16), the flow field is not detaching from the wall at any locations (Fig. 17), and requires a driving pressure of 23 bar, instead of 26 bar of the reference case.

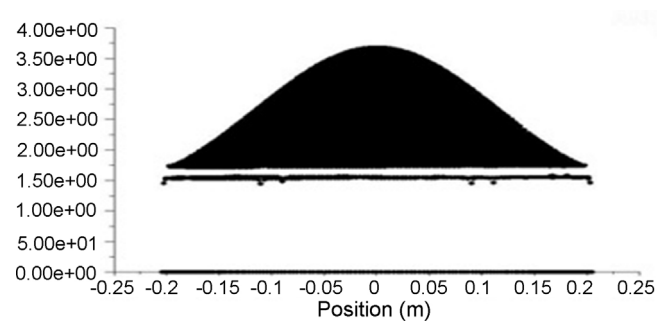

Fig. 15. Outlet diffuser velocity profile.

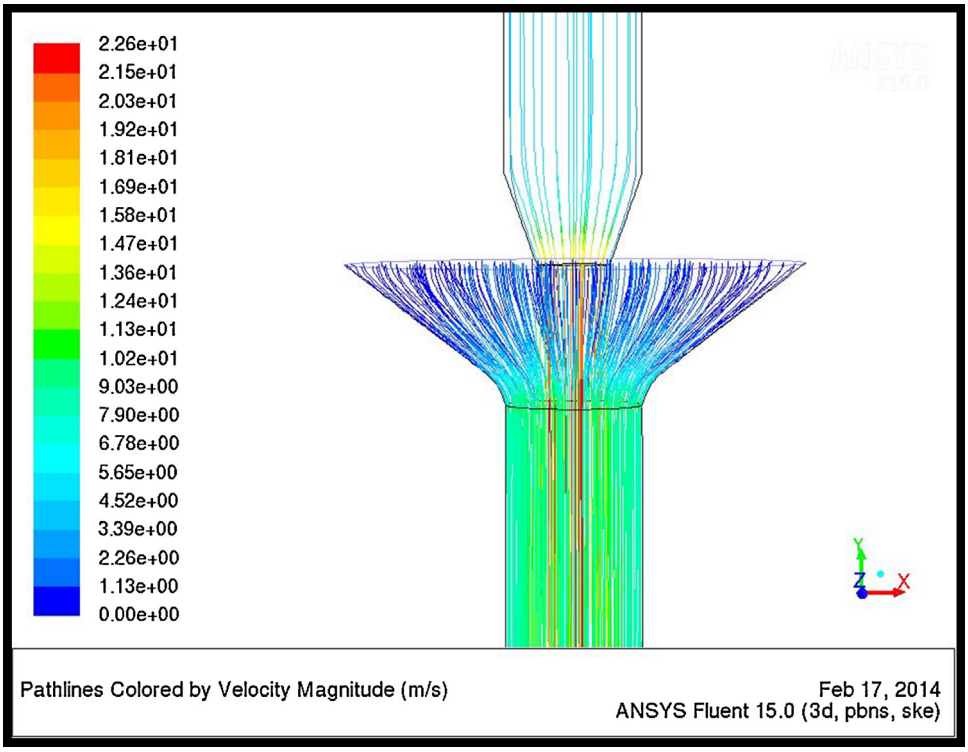

Fig. 16. Optimal case path lines colored by velocity magnitude.

Anyway, two issues should be addressed in order to make this configuration the ideal solution:

- The velocity in the throat section is still above the maximum velocity for not incurring in erosion/corrosion phenomena caused by flowing lead. While today's technology provides a number of surface treatments to prevent the erosion and corrosion phenomena, further experimental tests should be performed in order to assess the long-term feasibility of a jet pump working with lead evolving at maximum velocity of 15 m/s. As of now,

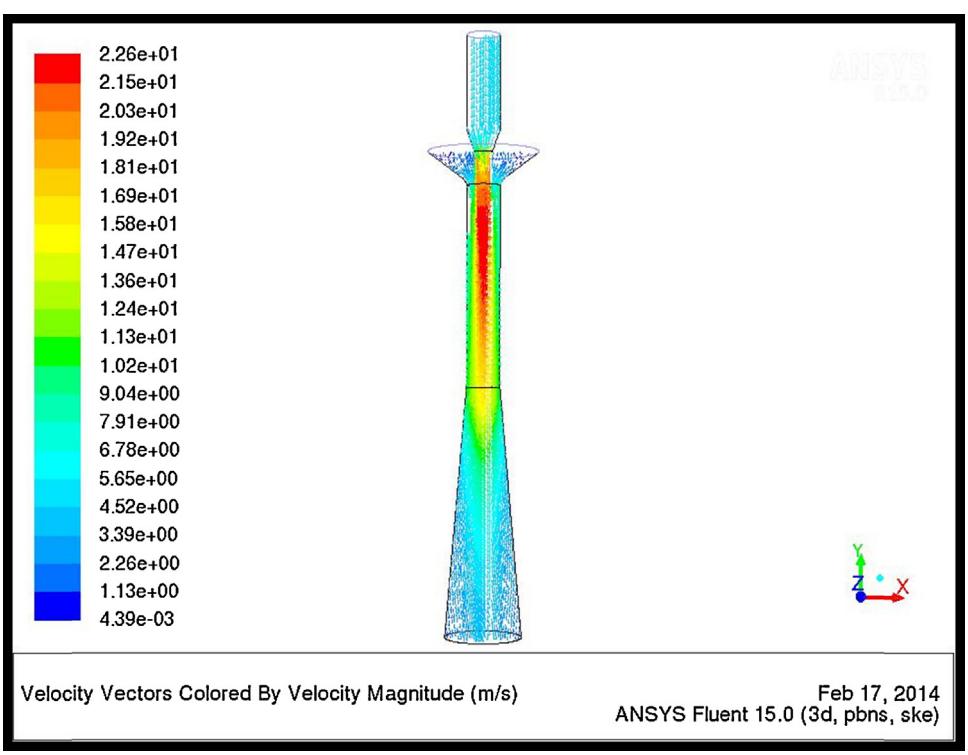

Fig. 17. Optimal case velocity vectors colored by velocity magnitude.

there is not a significant amount of experimental tests showing that a jet pump exposed to this conditions could endure long term operations without damages

- The required driving pressure for ideal performance is 23 bar. Designing a device generating a driving pressure of at least 23 bar could be a challenge. Currently the market does not make available general purpose pumps elaborating liquid lead with such head; it may be therefore required to design it and assess its costs, dimensions, durability. The authors are aware of commercial centrifugal pump elaborating liquid metal manufactured by the LT S.r.l. elaborating zinc at high velocity (10–15 m/s) (Zinco) for chemical applications. These devices can represent an initial basis for the development of a centrifugal pump working with liquid lead.

5. Conclusions and future works

The design of a liquid lead jet pump as primary pump for ALFRED has been performed. The validation of the design has been done initially comparing the numerical predictions with experimental data in water, and then using the same sizing criteria for lead. A parametric analysis has been performed to achieve a sensibility about the effects of the various parameter involved in a jet pump and to reach an optimal configuration, having a high ratio of suction mass flow rate vs. driver mass flow rate and respecting a number of additional criteria.

The results of the CFD analysis on the lead jet pump support the following conclusions:

- A three-dimensional geometry has been successfully modeled, adopting a relatively fine mesh which brings to accurate results that enables the accurate modeling of the entire flow field of the lead inside the pump.
- A model meeting the requirements of the primary pumps of ALFRED has been defined.
- A parametric study has been carried out to achieve an optimal lead jet pump configuration, at least from the fluid-dynamic point of view.
- The lead jet pump geometry satisfies the dimensional requirements imposed by the pump tube. The complete definition of the jet pump geometry will be completed with the study of a driver centrifugal pump.
- The driver nozzle is affected by the potential issue of a velocity of 15 m/s at the tip; the realization of this jet pump requires therefore special components and treatments, which have to be tested experimentally.

In order to achieve a complete description of the liquid lead Jet Pump, the following activities are planned for the future:

- The detailed structural analysis on the entire component.
- The analysis on the economic and financial aspects related to its development.
- The check of the jet pump behavior in Station Black-out and accidental scenarios, also by means of system codes as RELAP5-3D.

Acknowledgments

The work presented in this paper was partly funded within the LEADER Project (Contract No. 249668) under the auspices of the EU 7th Framework Program. The authors would like express their gratitude to Luigi Mansani of Ansaldo Nucleare S.p.A., whose expertise, understanding and patience added considerably to this paper. Finally we want to thank Marco Gregorini of Ansaldo Nucleare S.p.A. for his support and suggestion in the use of RELAP5-3D software.

References

Anderson, J.D., 1995. Computational Fluid Dynamics: The basics with Applications. McGraw-Hill, New York.
ANSYS, 2013, September. Introduction to ANSYS Meshing, Lecture 8 – Mesh Quality. ANSYS Summer School, Napoli.
ANSYS, ANSYS Workbench User Guide.
Artioli, C., Grasso, G., Petrovich, C., 2010. A new paradigm for core design aimed at the sustainability of nuclear energy: the solution of the extended equilibrium state. Ann. Nucl. Energy 37, 915–922.
Cerullo, N., Lomonaco, G., 2012a. Generation IV reactor designs, operation and fuel cycle. In: I. Crossland, Nuclear Fuel Cycle Science and Engineering. Woodhead Publishing, pp. 333–395, http://dx.doi.org/10.1533/9780857096388.3.333.
Cerullo, N., Lomonaco, G., 2012b. Corrosion issues in high temperature gas-cooled reactor (HTR) systems. In: Féron, D. (Ed.), Nuclear Corrosion Science and Engineering. Woodhead Publishing, pp. 731–772, http://dx.doi.org/10.1533/9780857095343.6.731.
Cunningham, R.G., 2007. Jet pump theory. In: Karassik, I.J., Messina, J.P., Cooper, P., Heald, C.C. (Eds.), Pump Handbook. , 3rd edition. McGraw-Hill.
Del Giacco, M., 2013. Investigation of Fretting Wear of Cladding Materials in Liquid Lead. KIT Scientific Publishing.
El-Sawaf, I.A., Halawa, M.A., Younes, M.A., Teaima, I.R., 2011. Study of the different parameters that influence on the performance of water jet pump. In: Fifteenth International Water Technology Conference, IWTC 15, Alexandria, Egypt.
http://www.brasimone.enea.it/laboratori/ads.html
SNETP, Alemberti's report. http://www.snetp.eu/www/snetp/images/3.%20a.alemberti%20alfred%20-%20brux%2025-6-2012.pdf
http://www.zinco.it
IAEA, 2013. Nuclear Power Reactors in the World, Reference Series no. 2.
Idaho National Laboratory, 2005, June. RELAP5-3D Code Manual, Vol. I, Idaho.
Jianu, A., 2011. KIT-Program of Nuclear Safety Research – KIT-Campus Nord Institute: INR, IKET, IHM, IMF III, Improving the Corrosion Surface Resistance and Creep Strength of Steels Exposed to Heavy Liquid Metals by Surface Modification Using Pulsed E-BEAMS. IAEA INPRO-COOL Project, Activity 6: Components for Service in Intimate Contact with High Temperature Coolant (LM and MS), 10–11 May.
Jiyuan, T., Guan, H.Y., Chaoquin, L., 2012. Computational Fluid Dynamics: A Practical Approach, 2nd edition. Butterworth-Heinemann.
Narabayashi, T., Yamazaki, Y., Kobayashi, H., Shakouchi, T., 2006. Flow analysis for single and multi-nozzle jet pump. JSME Int. J. Ser. B 49 (4).
Nuclear Energy Agency, 2007. Handbook on Lead–Bismuth Eutectic Alloy and Lead Properties, Materials Compatibility, Thermal-Hydraulics and Technologies. Nuclear Science Committee – Working Party on Scientific Issues of the Fuel Cycle – Working Group on Lead–Bismuth Eutectic https://www.oecd-nea.org/science/reports/2007/pdf/lbe-handbook-complete.pdf
Tennekes, H., Lumley, J.L., 1972. A First Course in Turbulence. Massachusetts Institute of Technology.
Versteeg, H.K., Malalasekera, W., 2007. An Introduction to Computational Fluid Dynamics: The Finite Volume Method, 2nd edition. Pearson Prentice Hall.
Wilcox, D.C., 1998. Turbulence Modeling for CFD. DCW Industries Inc., La Canada, CA.
Yapici, R., Aldas, K., 2013. Optimization of water jet pumps using numerical simulations. Proc. Inst. Mech. Eng. A: J. Power Energy 227 (June (438)), 4.
Zhang, J., 2009. A review of steel corrosion by liquid lead and lead-bismuth. Corros. Sci., 1207–1227.